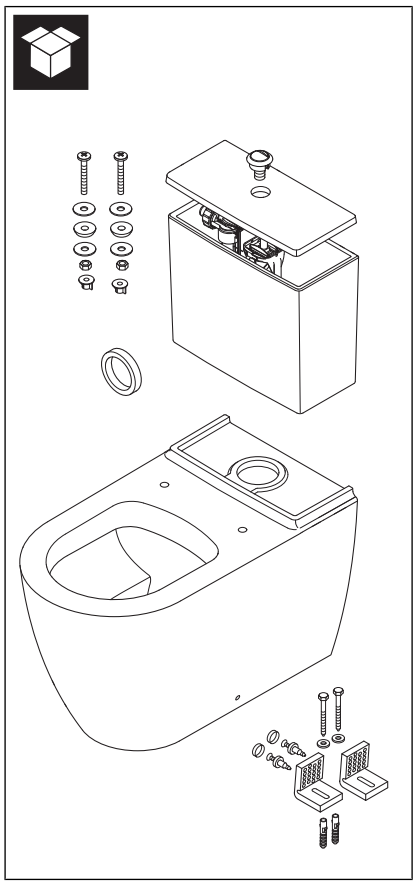



1

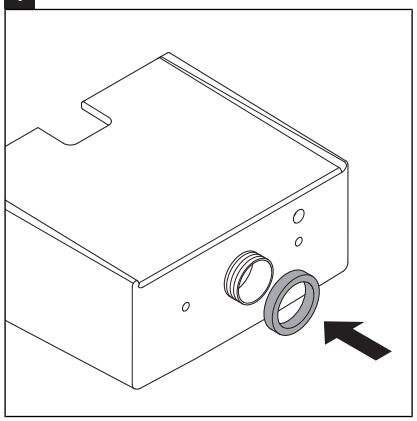

2

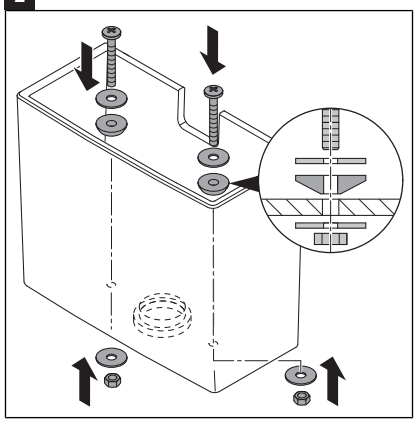

3

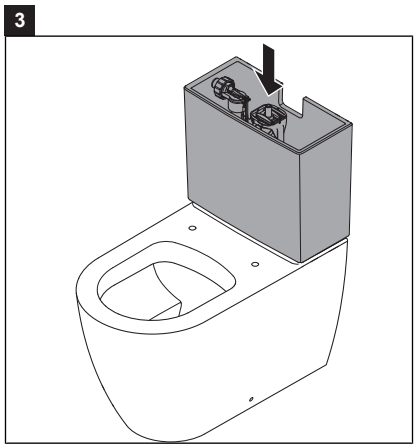

4

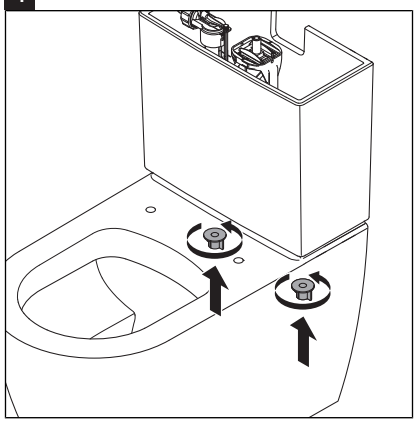

5

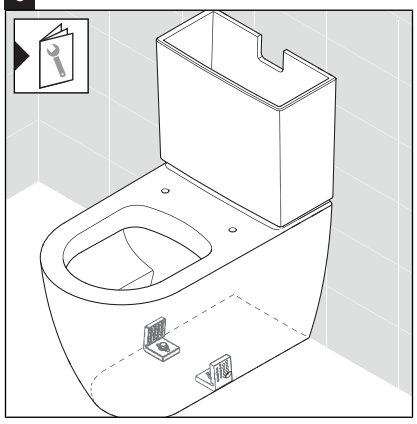

6

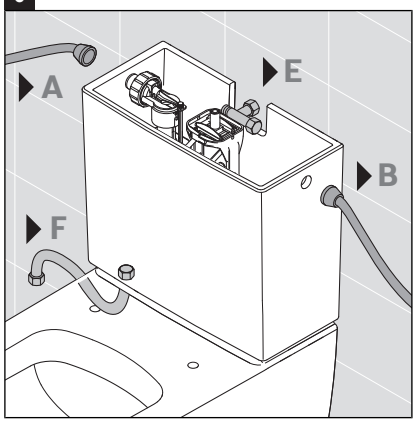

7

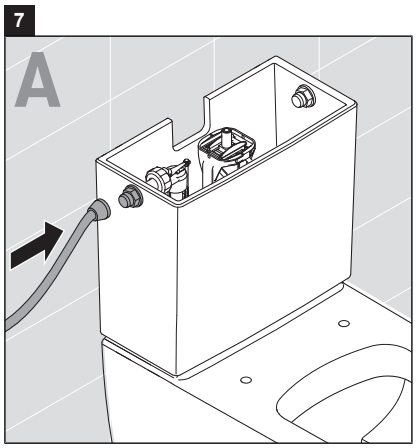

8

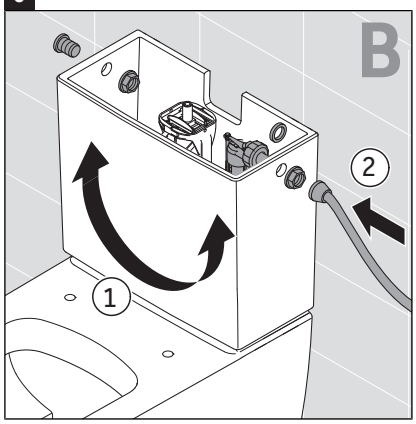

9

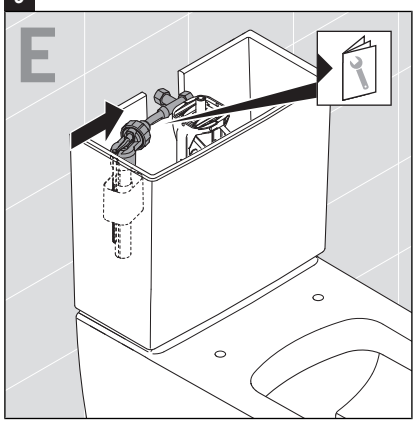

10

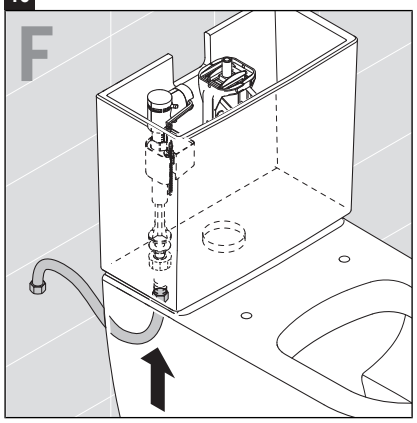

11

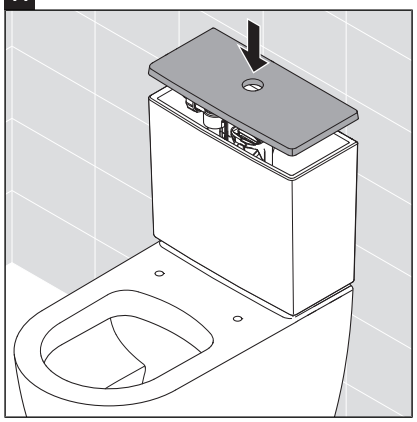

12

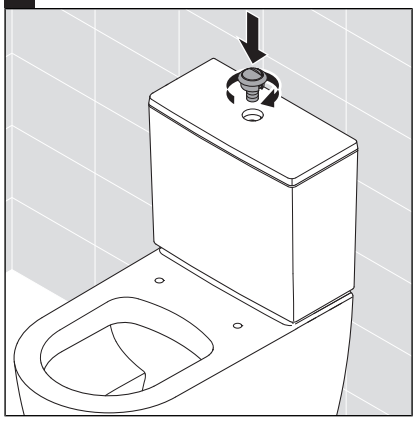

Order no. 70300452/2024.02.19 We reserve the right to make technical improvements and enhance the appearance of the products shown

Frauenthal Handel GmbH, Gurkgasse 7-9, 1140 Wien, AUSTRIA, www.fthg.at

FR
22
PAP