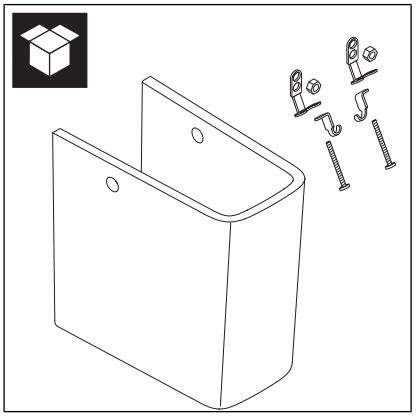

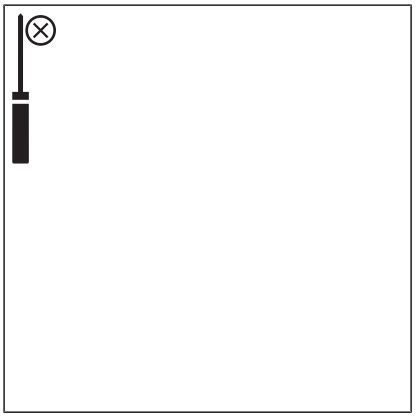

1

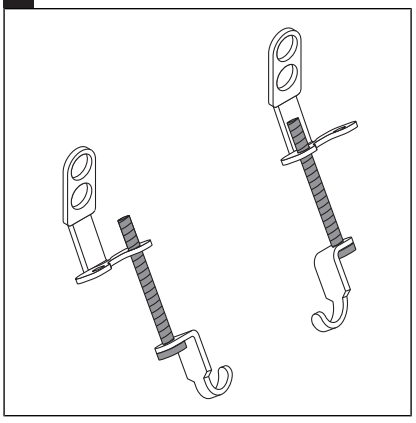

2

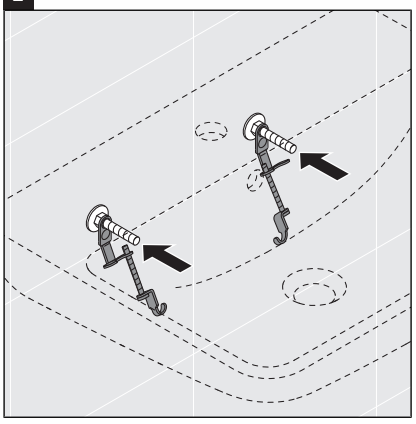

3

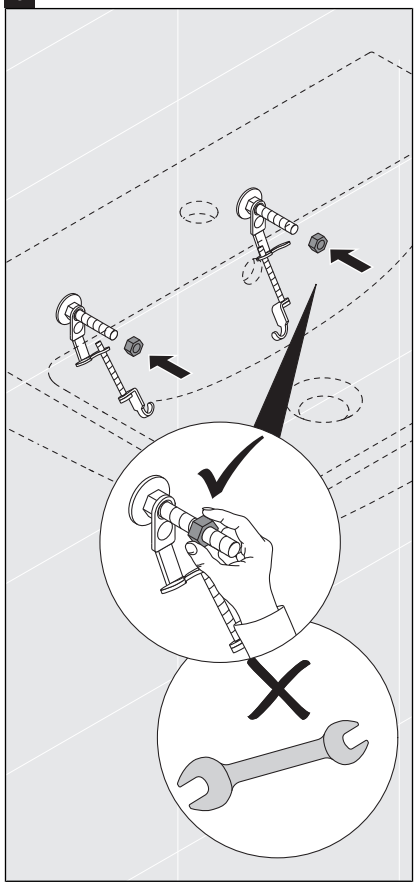

4

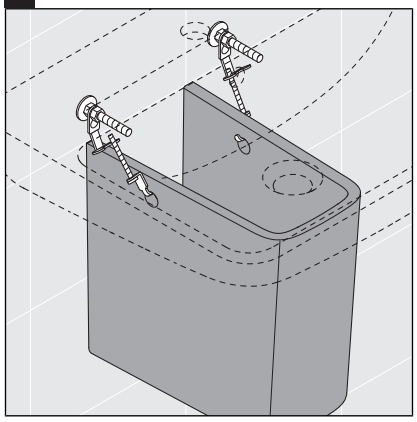

5

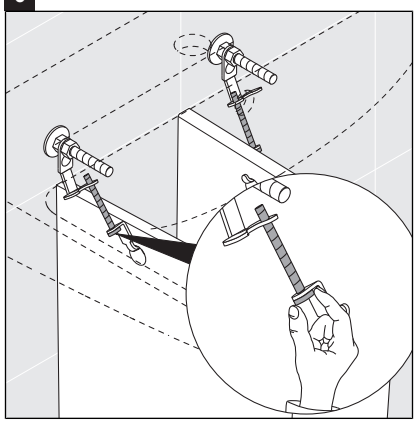

6

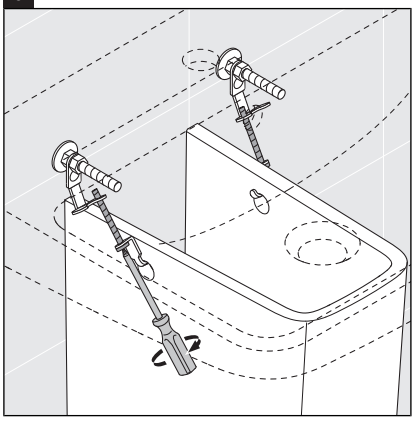

7

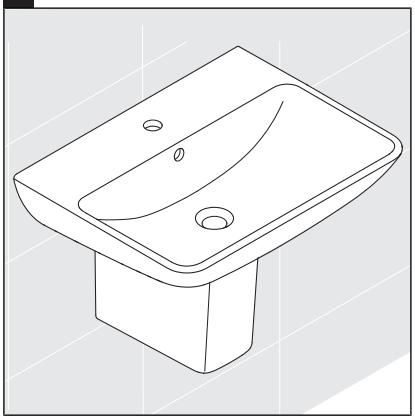

Order no. 70300460/24.02.22 We reserve the right to make technical improvements and enhance the appearance of the products shown

Frauenthal Handel GmbH, Gurkgasse 7-9, 1140 Wien, AUSTRIA, www.fthg.at