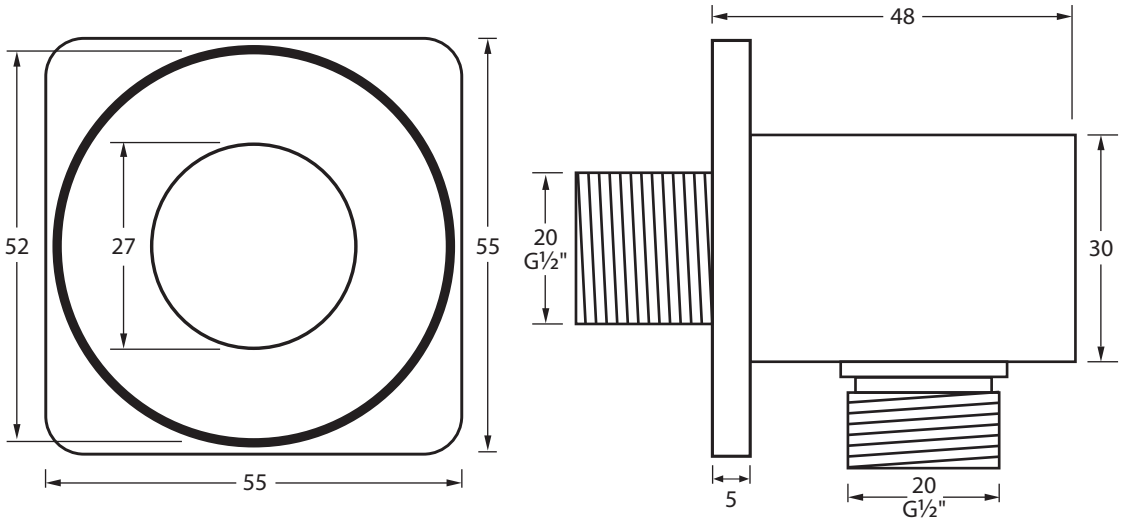
48
52
27
55
20
G½"
30
55
5
20
G½"