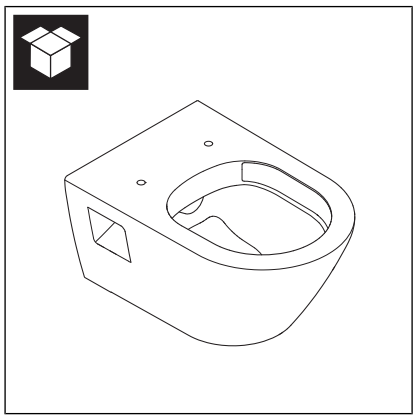

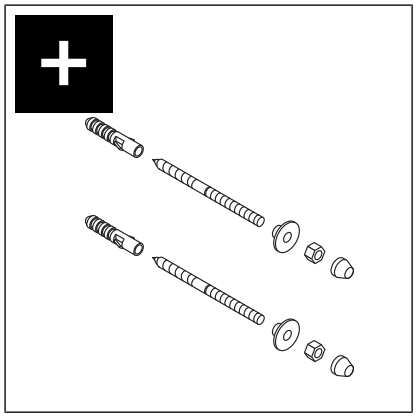

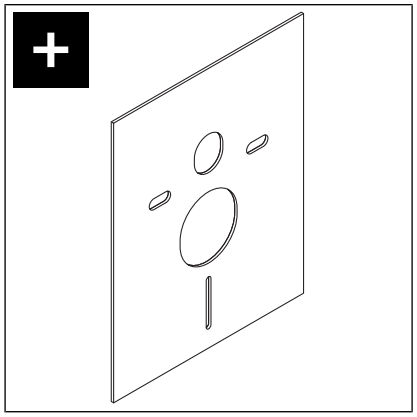

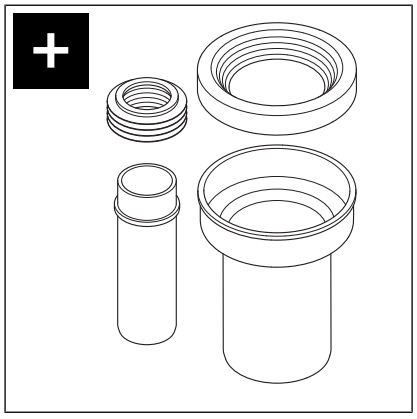



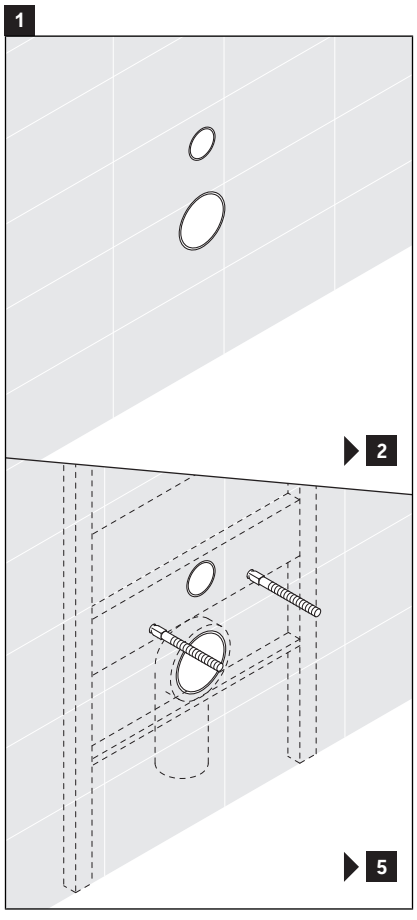
1
2
5

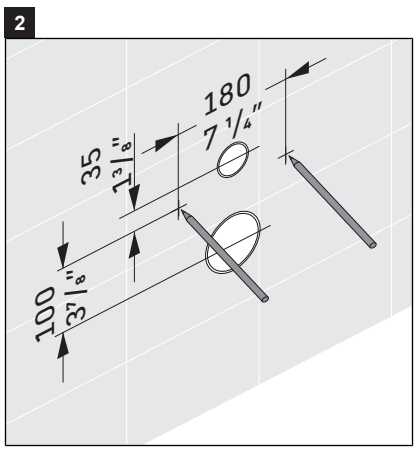
2
180
7 1/4"
35
1 3/8"
100
3 7/8"

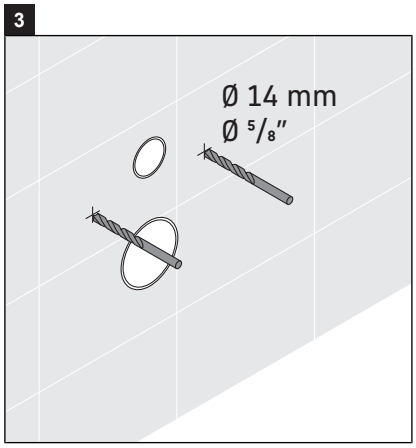
3
Ø 14 mm
Ø 5/8"

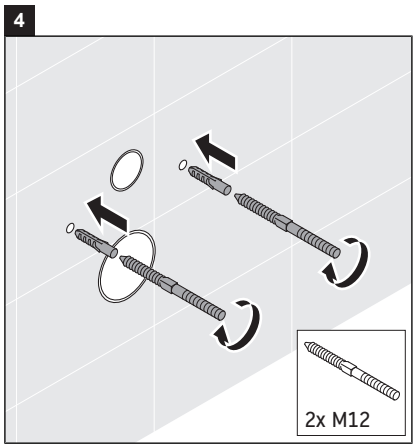
4
2x M12

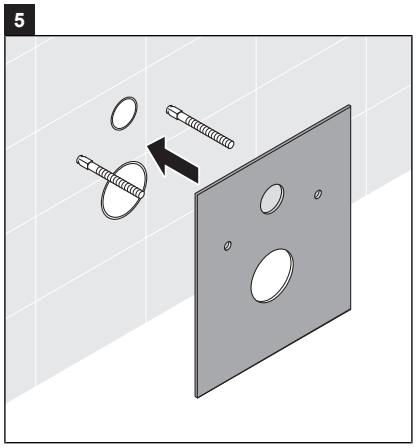
5

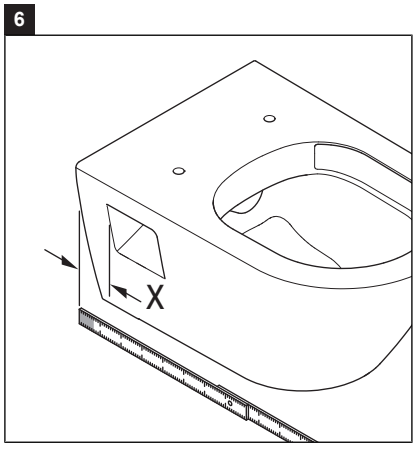
6
X

7

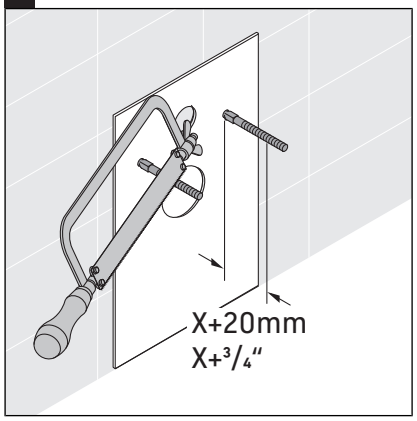

8

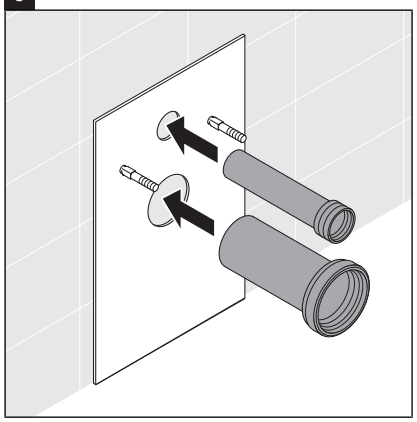

9

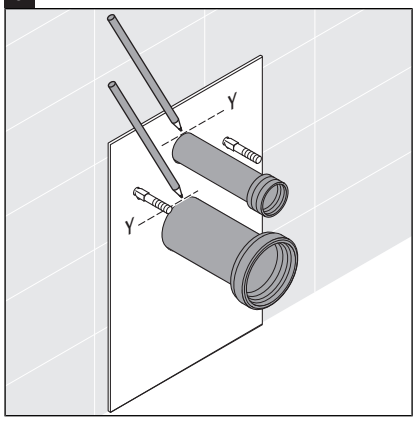

10

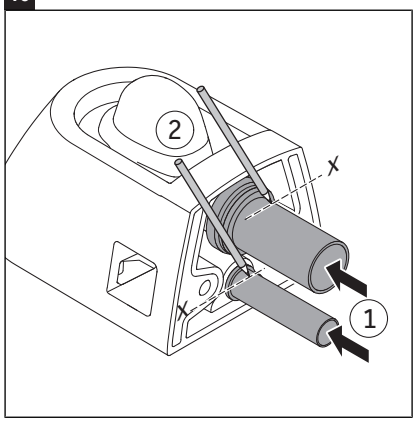

11

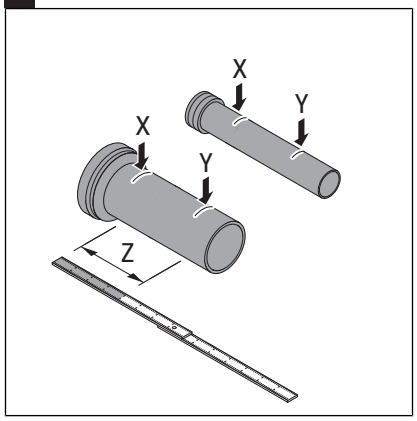

12

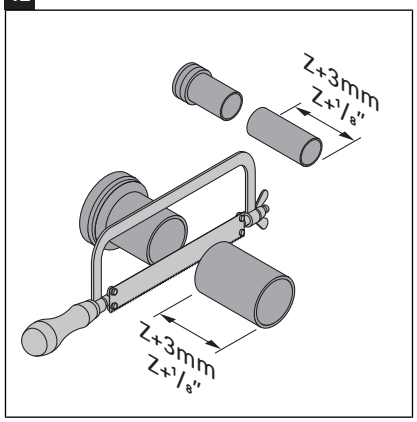

13

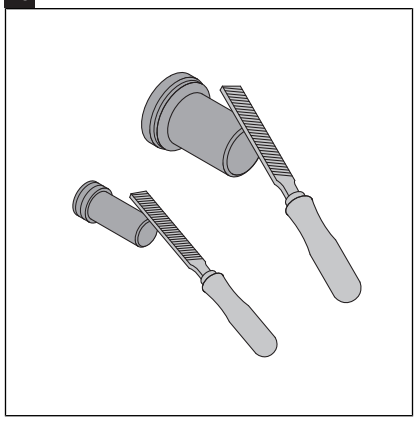

14

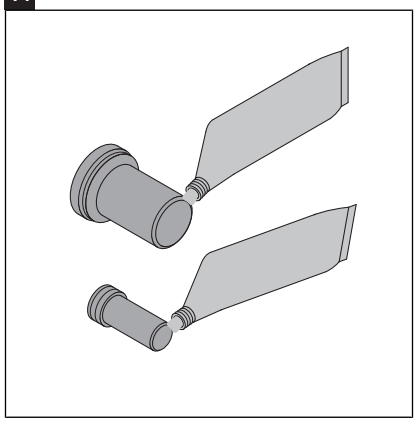

15

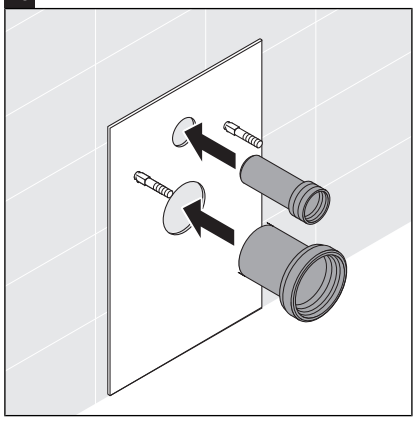

16

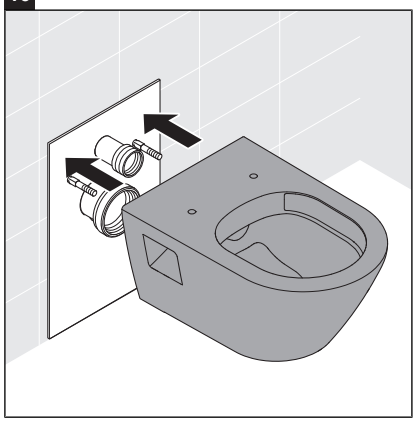

17

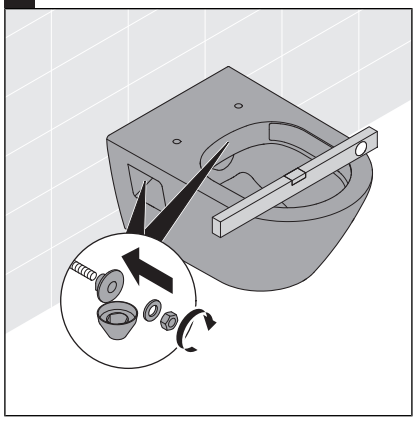

18



Frauenthal Handel GmbH, Gurkgasse 7-9, 1140 Wien, AUSTRIA, www.fthg.at

Order no. 70300463/24.03.19 We reserve the right to make technical improvements and enhance the appearance of the products shown