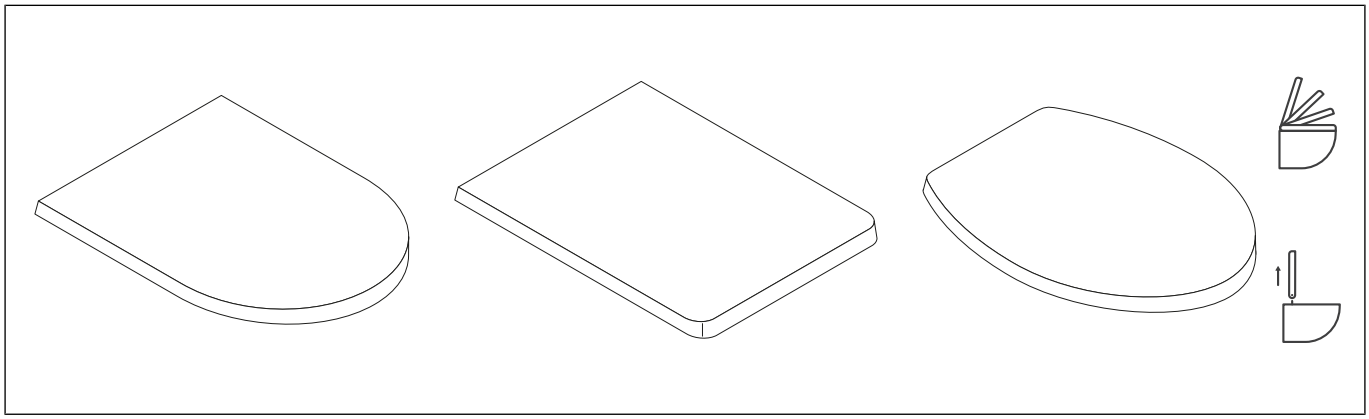

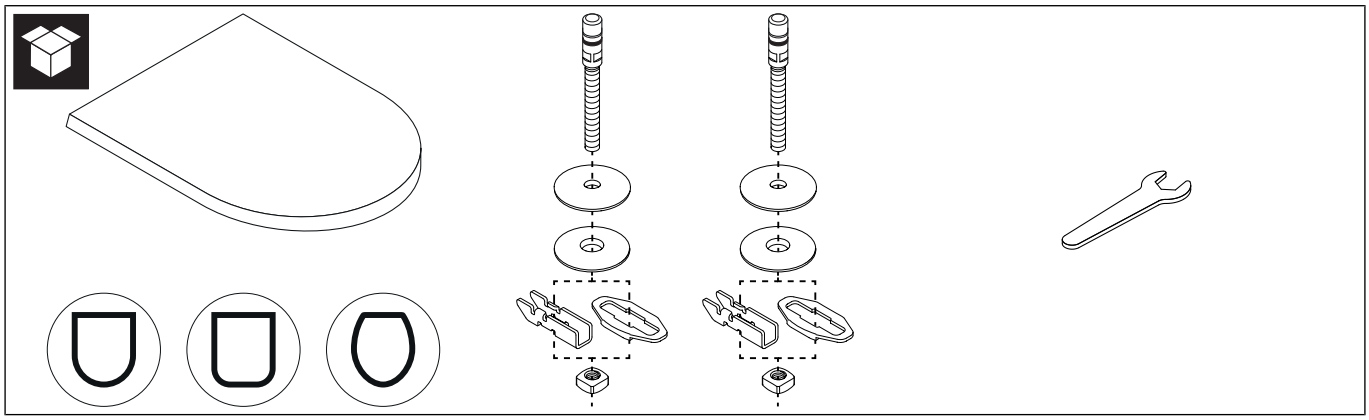

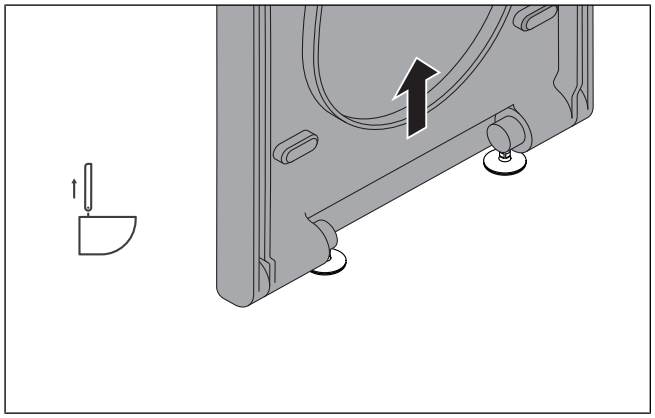

1

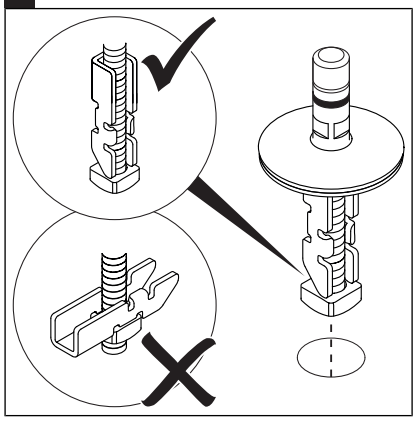

5

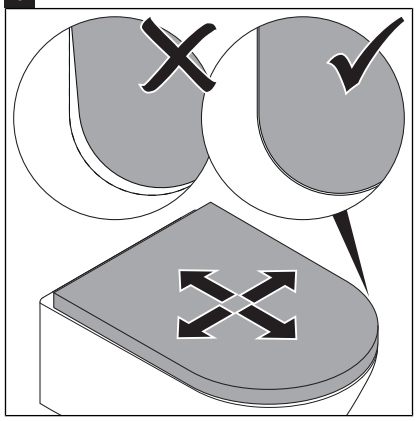

2

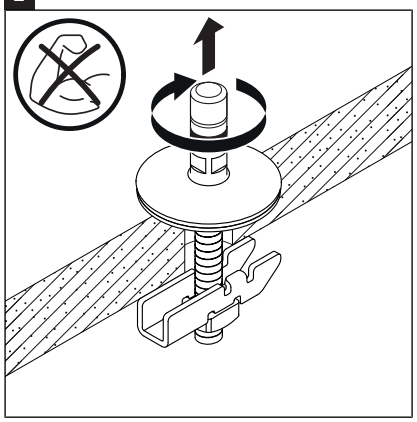

6

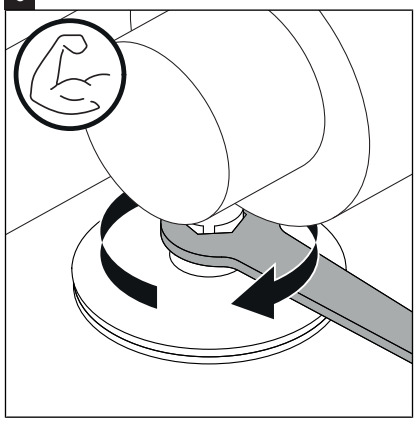

3

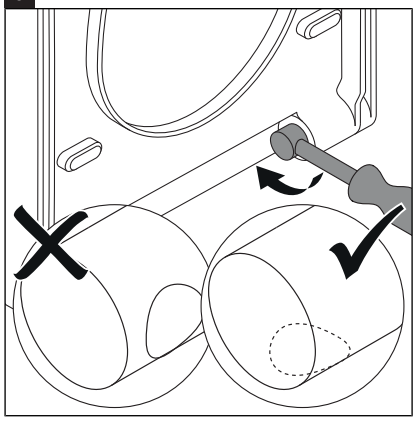

4

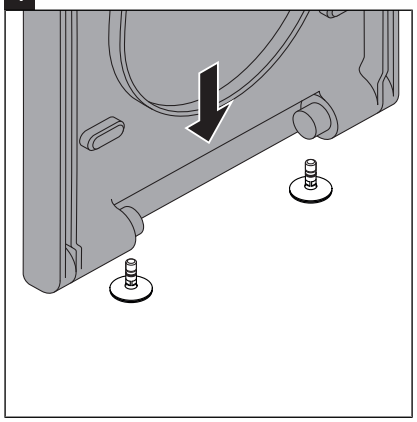

Frauenthal Handel GmbH, Gurkgasse 7-9, 1140 Wien, AUSTRIA, www.fthg.at

Order no. 70300465/ We reserve the right to make technical improvements and enhance the appearance of the products shown