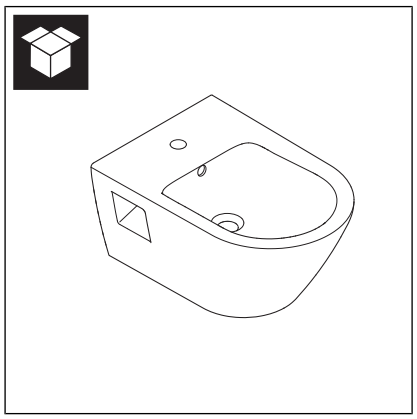

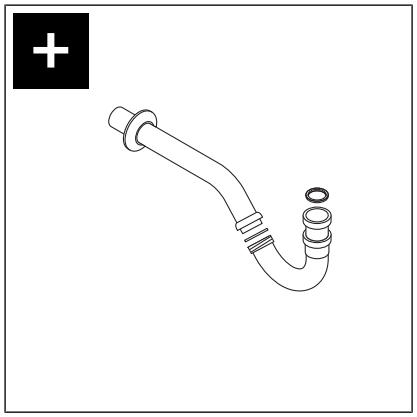

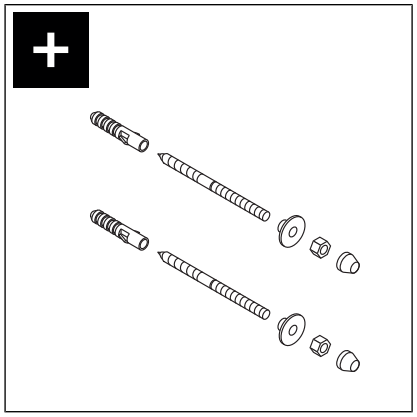



1

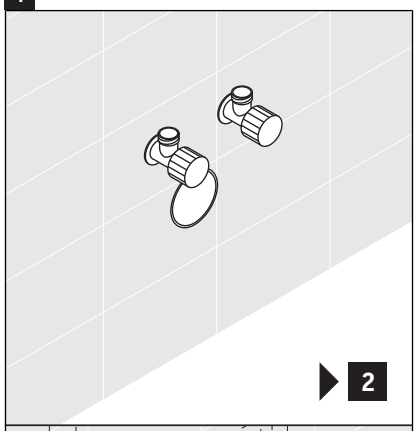

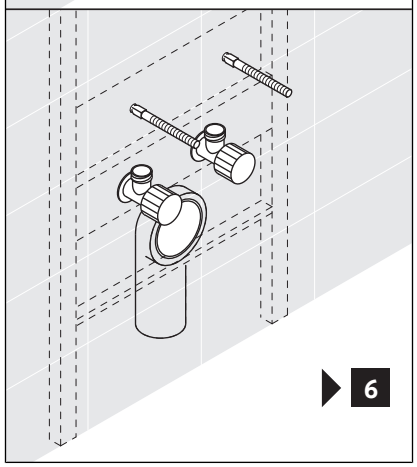

2

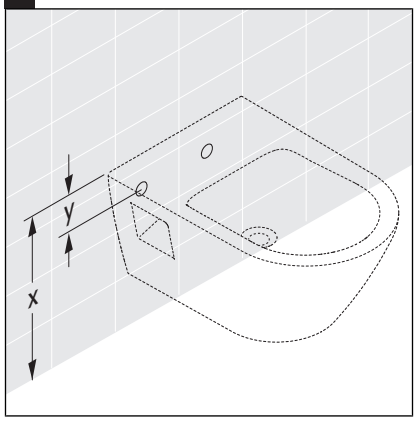

3

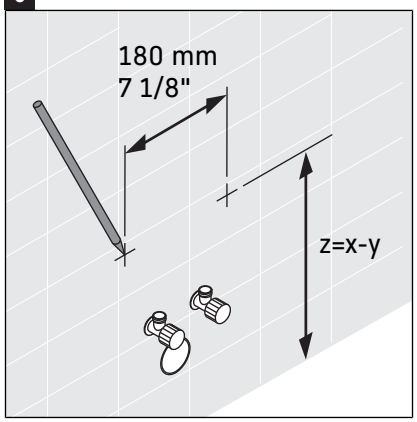

4

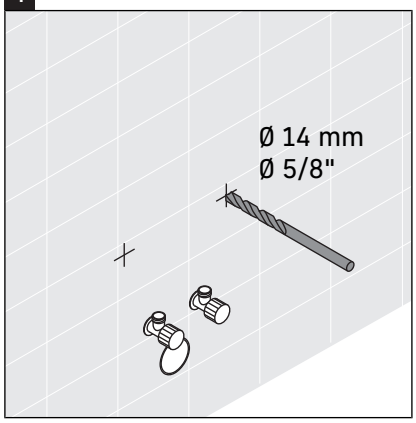

5

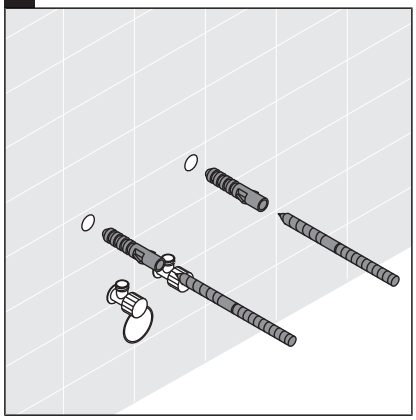

6

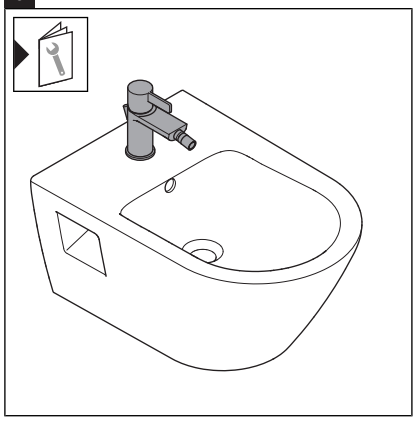

7

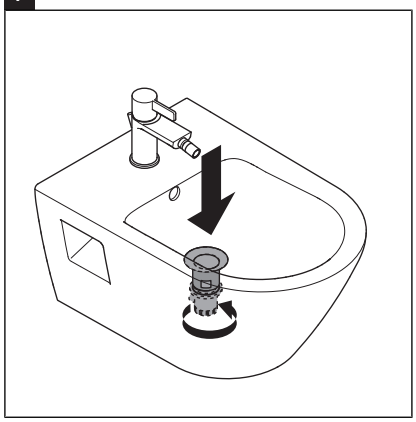

8

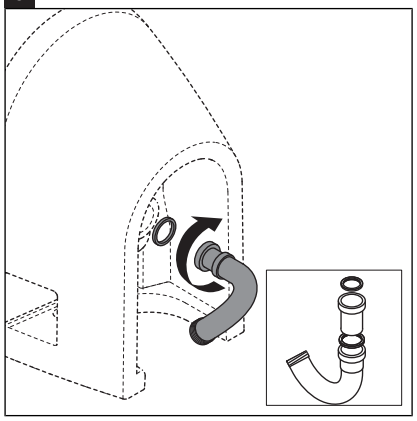

9

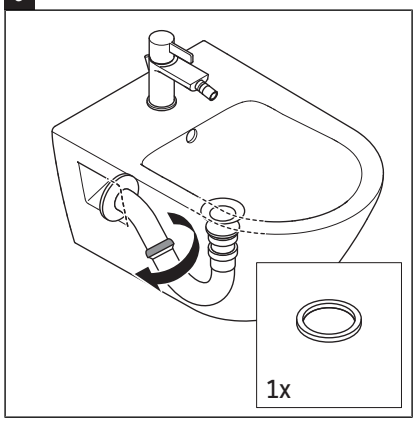

10

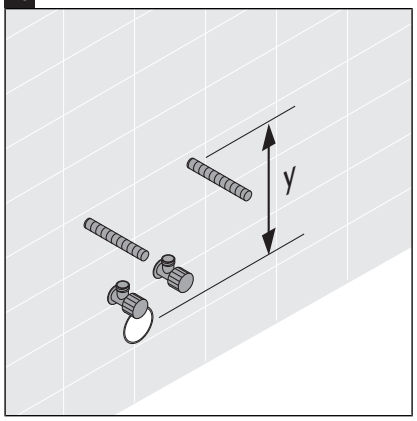

11

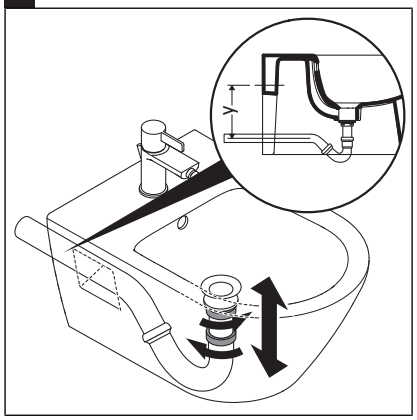

12

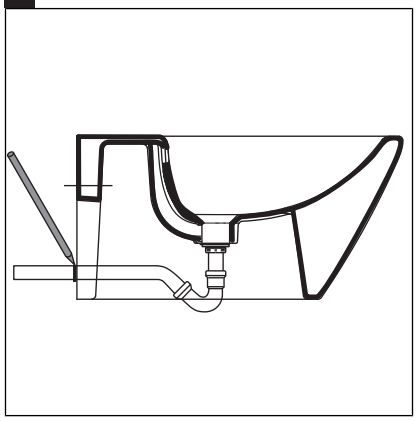

13

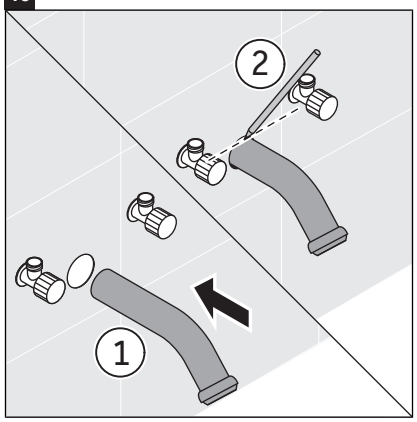

14

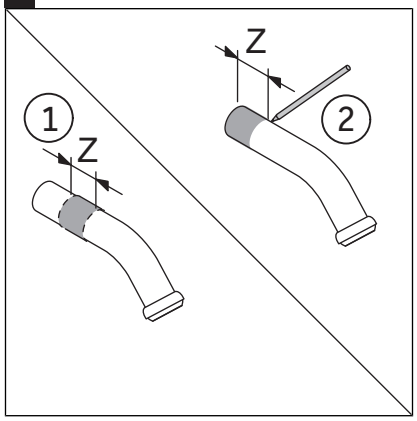

15

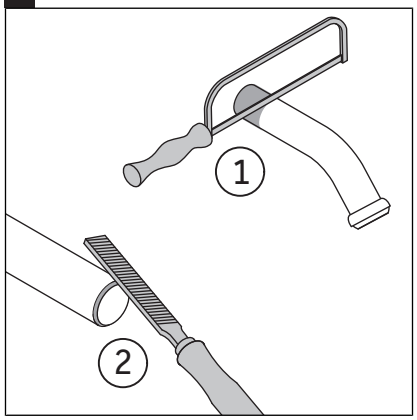

16

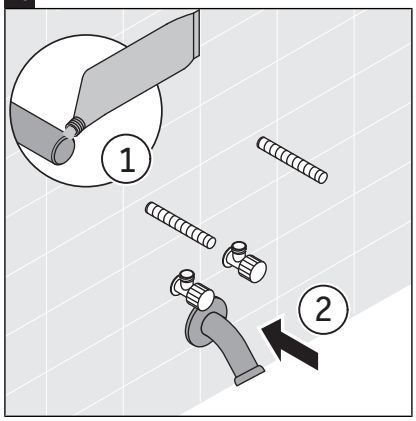

17

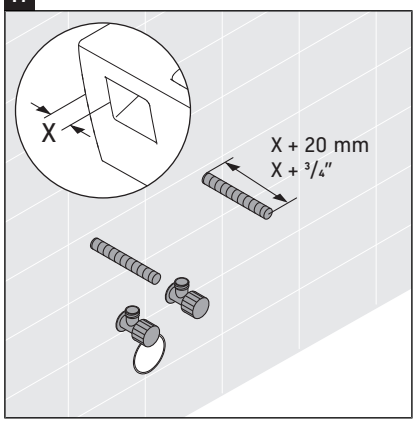

18

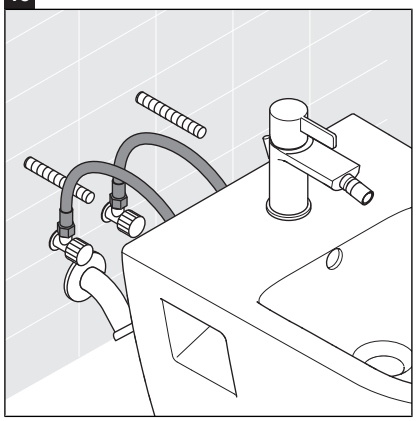

19

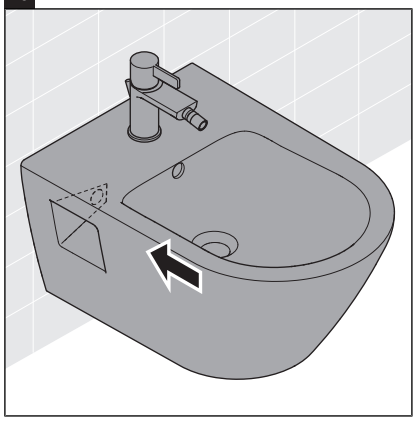

20

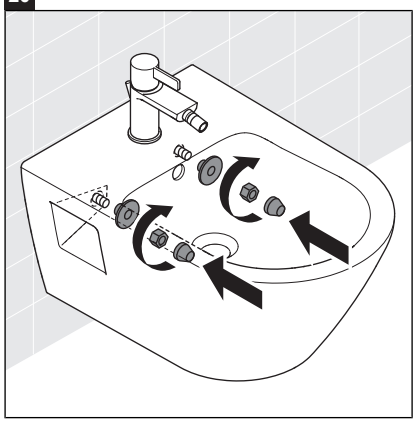

21

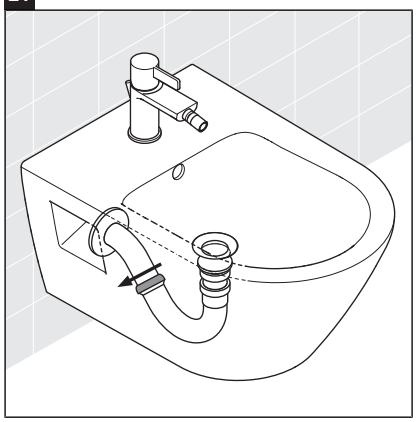

22

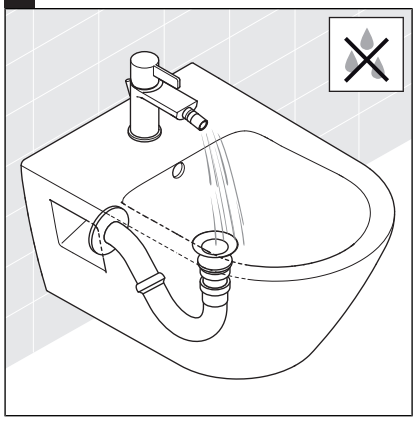

23

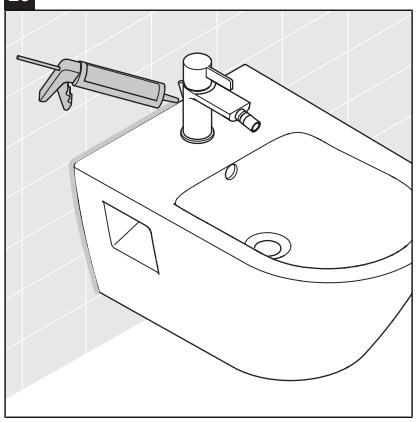

Order no. 70300462/24.03.27 We reserve the right to make technical improvements and enhance the appearance of the products shown